ISSN: 2582 - 6379
Orange Publications
International Journal for Interdisciplinary Sciences and Engineering Applications
IJISEA - An International Peer- Reviewed Journal
2025, Volume 6 Issue 2
www.ijisea.org

Power Quality Enhancement in Renewable Energy-Based Distributed Generation Using DPFC

A Balaji[1], N N V Gopi Chand[2], P H V Hasmitha[3] , M Viswa Prakash[4]
Department of EEE Usha Rama College of Engineering and Technology, Telaprolu, Andhra Pradesh

baluurce@gmail.com[1], gopichandhnarisetti@gmail.com[2], phvhasmitha@gmail.com[3], prakashviswa807@gmail.com[4]

ABSRTACT

This paper presents an advanced approach for improving power quality in renewable energy-based distributed generation (DG) systems by integrating a Distributed Power Flow Controller (DPFC). The proposed hybrid system, combining solar and wind sources, faces challenges like voltage sags, current swells, and harmonic distortion. A DPFC is introduced to mitigate these disturbances. The simulation, performed using MATLAB/Simulink, demonstrates the system's ability to stabilize voltage, regulate current, and reduce Total Harmonic Distortion (THD). The results highlight the effectiveness of DPFC in enhancing system reliability, making it suitable for smart grid applications.

Keywords: Distributed Generation, Renewable Energy, DPFC, Power Quality, Voltage Stability, Harmonic Mitigation, MATLAB Simulation.

I. INTRODUCTION

Modern power systems are witnessing a surge in renewable energy integration. Solar and wind sources are clean but inherently unstable, leading to frequent power quality issues like voltage fluctuations and harmonic distortions. Such problems can damage sensitive equipment and reduce system efficiency.

FACTS devices, especially the Distributed Power Flow Controller (DPFC), offer robust solutions for these challenges. Unlike the Unified Power Flow Controller (UPFC), the DPFC uses separate series and shunt converters, enabling power flow control without a common DC link. This unique configuration facilitates better flexibility, cost reduction, and increased modularity.

This study explores the application of DPFC in a hybrid renewable energy setup. The system is analyzed under dynamic conditions, with simulations validating its ability to maintain power quality and enhance grid performance.

II. DPFC OVERVIEW

The Distributed Power Flow Controller (DPFC) is a smart device used to control power flow in electrical systems. It works by using separate shunt and series converters, which operate independently. This setup avoids the need for a common DC link and helps lower system costs. The DPFC transfers active power using third-harmonic currents through the same transmission line used for main power flow. This approach is simple, effective, and useful in systems powered by renewable energy, where maintaining stable voltage and current is important.

ISSN: 2582 - 6379
Orange Publications
International Journal for Interdisciplinary Sciences and Engineering Applications
IJISEA - An International Peer- Reviewed Journal
2025, Volume 6 Issue 2
www.ijisea.org

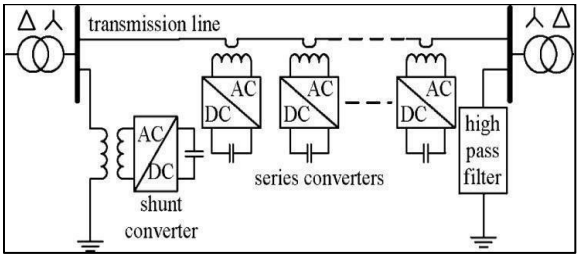

Figure 1: Shows Configuration of DPFC

The DPFC architecture includes:

- Shunt Converter: Injects or absorbs reactive power similar to a STATCOM.
- Series Converters: Low-power, single-phase converters distributed along the transmission line.
- Third Harmonic Power Exchange: Active power is exchanged through the transmission line using third-harmonic signals, eliminating the need for a DC link.

This design allows the DPFC to manage voltage magnitude, phase angle, and line impedance independently. It improves operational flexibility, reduces costs, and enhances power transfer capability.

III. CONTROL STRATEGY

The DPFC employs four main control loops:

A. Central Control:

The central controller oversees both the series and shunt controllers, providing reference signals to each.

B. Series Control:

Each single-phase series converter in the DPFC system is controlled independently through the transmission line. The input signals to the controller include the capacitor voltage across the series converter, the transmission line current, and the fundamental reference voltage expressed in the rotating dq-frame. The dq-frame voltage components are given by:

$$V_d \cos\omega t \quad (1)$$

$$V_q \sin\omega t \quad (2)$$

The reference voltage corresponding to the fundamental component is:

$$V_{ref1} = V_d \cos\omega t + V_q \sin \omega t \quad (3)$$

An error signal is calculated based on the difference between the desired and measured DC capacitor voltage:

$$V_{dcse}=V_{ref,dc}-V_{dc} \quad (4)$$

The reference voltage in third harmonic component is given by,

$$V_{ref,3}=V_{dc,se}.\sin 3\omega t \quad (5)$$

The total output reference voltage applied to the series converter is:

$$V_{ref}= V_{ref,1}+ V_{ref,3} \quad (6)$$

C. Shunt Control:

The shunt converter in the DPFC system comprises a three-phase converter connected in a back-to-back configuration with a single-phase converter. Operating at the fundamental frequency, the three-phase unit draws active power from the grid and maintains the DC link voltage across the shared capacitor between the two converters.

ISSN: 2582 - 6379
Orange Publications
International Journal for Interdisciplinary Sciences and Engineering Applications
IJISEA - An International Peer- Reviewed Journal
2025, Volume 6 Issue 2
www.ijisea.org

In the control strategy, the voltage references are defined in the rotating dq-frame as VdrefandVqref. These are converted into the abc-frame using Park's transformation as follows:

$$V_a=V_{dref}\sin\omega t+V_{qref}\cos\omega t+V_o \quad (7)$$

$$V_b=V_{dref}\sin(\omega t-120)+V_{qref}\cos(\omega t-120)+V_o \quad (8)$$

$$V_c=V_{dref}\sin(\omega t+120)+V_{qref}\cos(\omega t+120)+V_o \quad (9)$$

Pulse Width Modulation (PWM) is used to generate the gate signals for the shunt converter based on these transformed voltages.

D. Third Harmonic Control:

The third harmonic control circuit is designed to generate harmonic components by converting the fundamental frequency into its third harmonic counterpart. This is accomplished by tripling the angular frequency. The voltage components in the dq_0 reference frame are given by:

$$V_d=V_\alpha\cos3\omega t+V_\beta\sin3\omega t \quad (10)$$

$$V_q=V_\beta\cos3\omega t-V_\alpha\sin3\omega t \quad (11)$$

$$V_0=0 \quad (12)$$

The dq0 components are then converted to the ABC reference frame through Park's transformation, utilizing the equations presented in (7), (8), and (9). For generating the gate pulses required for the third harmonic control circuit, the Pulse Width Modulation (PWM) technique is employed. This method plays a key role in controlling the switching operations of the system.

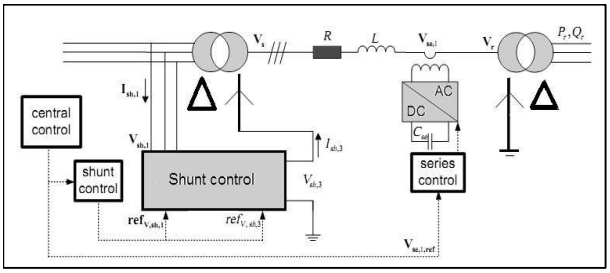

Figure 2: Shows structure for DPFC Control

IV. ADVANTAGES AND LIMITATIONS

Advantages:

1. Improved Control: Independent control of voltage, impedance, and angle.
2. Cost-Effective: Low-rated converters and no common DC link.
3. Modular Design: Easier scalability and redundancy.
4. Enhanced Power Quality: Effective in mitigating sags, swells, and harmonics.

Limitations:

1. Harmonic Injection: May slightly increase line losses.
2. Complex Control: Requires advanced algorithms and synchronization.

V. SIMULATION RESULTS

The case study, considering sag and swell conditions, is applied to a single-machine infinite bus system, with the results of the analysis summarized below. To evaluate voltage dip, a three-phase fault is introduced near the system load. The fault duration is 0.5 seconds (500-1000 ms). During this fault period, a noticeable voltage sag occurs. The voltage sag reaches approximately 0.5 p.u. The DPFC effectively mitigates this voltage sag.

ISSN: 2582 - 6379
Orange Publications
International Journal for Interdisciplinary Sciences and Engineering Applications
IJISEA - An International Peer- Reviewed Journal
2025, Volume 6 Issue 2
www.ijisea.org

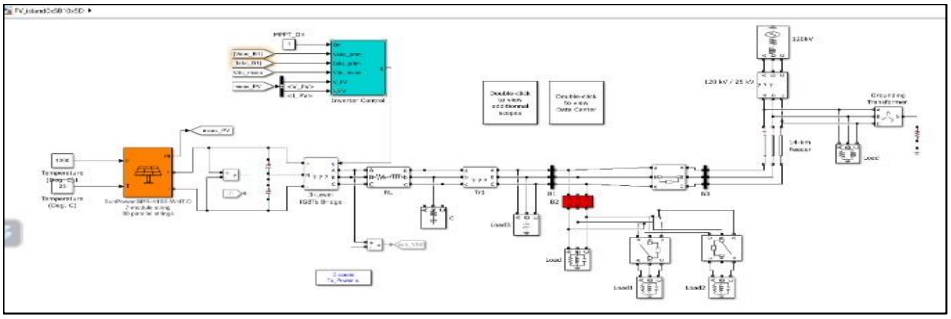

Figure 3: Shows DPFC Simulated model

Voltage Sag Mitigation: Without DPFC, the voltage drops to 0.5 p.u. With DPFC, it remains near nominal level.

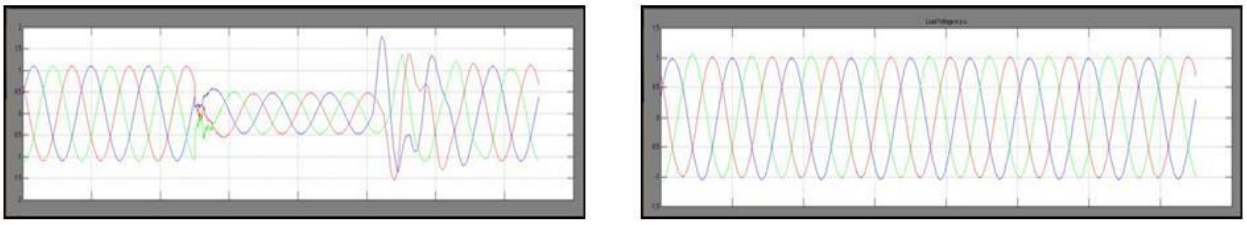

Figure 4 & 5 : Shows Waveform for Three-phase load voltage sag & Mitigation of three-phase load voltage sag with DPFC

Current Swell Reduction: DPFC effectively limits current rise during faults.

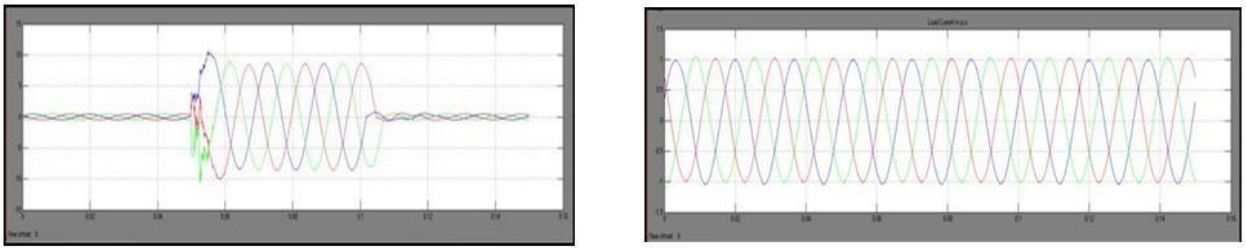

Figure 6 & 7: Shows Waveform for Three-phase load currents well & Shows Mitigation of load currents well with DPFC

THD Improvement: FFT analysis shows a drop in THD from 8.2% to 1.6% after deploying DPFC.

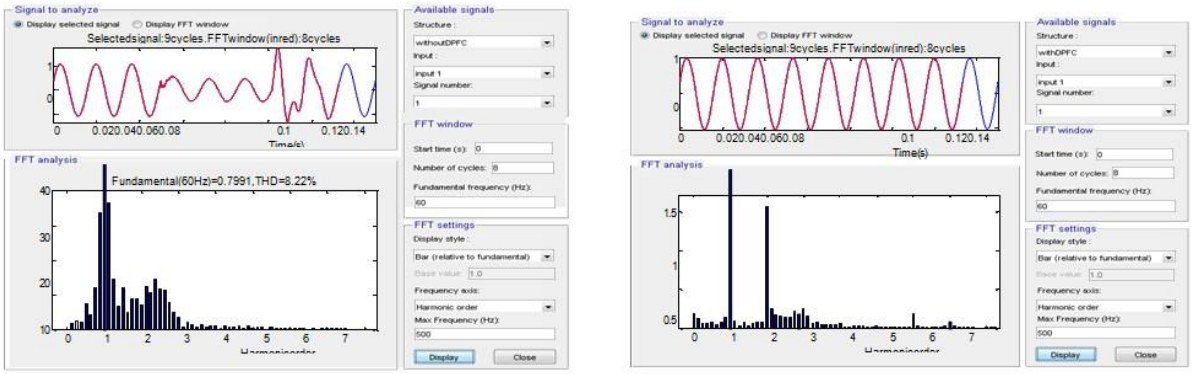

Figure 8 & 9 : Shows THD for the load voltage before DPFC & THD for the load voltage after DPFC

These results validate the ability of DPFC to maintain voltage and current stability and suppress harmonics under dynamic grid conditions.

ISSN: 2582 - 6379
Orange Publications
International Journal for Interdisciplinary Sciences and Engineering Applications
IJISEA - An International Peer- Reviewed Journal
2025, Volume 6 Issue 2
www.ijisea.org

VI. CONCLUSION

The integration of a Distributed Power Flow Controller in a renewable energy-based DG system proves to be a promising solution for power quality enhancement. The DPFC effectively mitigates voltage sags, current swells, and harmonics. With its modular and cost-efficient structure, it can be a key enabler in future smart grids, especially where renewable penetration is high.

REFERENCES:

[1] B. Singh, K. Al-Haddad, and A. Chandra, "A review of active filters for power quality improvement," IEEE Trans. Ind. Electron., vol. 46, no. 5, pp. 960–971, 1999.
[2] M. A. Hannan and A. Mohamed, "PSCAD/EMTDC simulation of unified series-shunt compensator for power quality improvement," IEEE Trans. Power Delivery, vol. 20, no. 2, pp. 1442–1449, 2005.
[3] A. L. Olimpo and E. Acha, "Modeling and analysis of custom power systems by PSCAD/EMTDC," IEEE Trans. Power Delivery, vol. 17, no. 1, pp. 266–272, 2002.
[4] P. Pohjanheimo and E. Lakervi, "Steady state modeling of custom power components in power distribution networks," in Proc. IEEE Power Eng. Soc. Winter Meeting, vol. 4, pp. 2949–2954, 2000.
[5] Z. H. Yuan, S. W. H. de Haan, B. Ferreira, and D. Cevoric, "A FACTS device: Distributed power flow controller (DPFC)," IEEE Trans. Power Electron., vol. 25, no. 10, pp. 2564–2572, Oct. 2010.
[6] Z. H. Yuan, S. W. H. de Haan, and B. Ferreira, "DPFC control during shunt converter failure," IEEE Trans. Power Electron., vol. 25, no. 10, pp. 2457–2465, 2009.
[7] R. Zhang, M. Cardinal, P. Szczesny, and M. Dame, "A grid simulator with control of single-phase power converters in D.Q rotating frame," in Proc. IEEE Power Electron. Specialists Conf., 2002.