ISSN: 2582 - 6379
IJISEA Publications
International Journal for Interdisciplinary Sciences and Engineering Applications
IJISEA - An International Peer- Reviewed Journal
2025, Volume 6 Issue 2
www.ijisea.org

Small Size Peanut Roaster Using Solar Powered Induction Heating for Street Vendors

Gobimohan Sivasubramanian[1], Rajkumar K[2], Baskar Gopal[3], Jijin Lal[4]
[1,3,4]College of Engineering & Technology, University of Applied sciences and Technology, Nizwa,Oman
[2]Saranathan College of Engineering,Anna University Chennai, Tamilnadu, India,

gobi.sivasubramanian@utas.edu.om[1], avk.rajkumar@gmail.com[2], baskar.gopal@utas.edu.om[3], jijin.lal@utas.edu.om[4]

ABSTRACT

In recent years, the demand for eco-friendly and sustainable roasting solutions has increased due to growing environmental concerns associated with traditional roasting methods that rely on firewood and gas stoves. These conventional techniques contribute to deforestation, carbon emissions, and air pollution, posing health risks to both vendors and consumers. To address these challenges, this project introduces a solar-powered induction heating groundnut roaster, specifically designed for street vendors. The system is designed for a compact vendor cart, replacing firewood and gas with a clean and efficient heating mechanism. The roaster incorporates an induction heating coil that ensures energy-efficient roasting, reducing operating costs while minimizing environmental impact. A temperature monitoring system enables precise control over the roasting process, preventing under or over-roasting. Additionally, a motorized stirrer is incorporated to ensure uniform heat distribution, enhancing the quality of the roasted groundnuts. The entire system is managed by an Arduino controller, automating the heating and stirring processes for improved efficiency. To enable uninterrupted operation, the system is powered by a solar photovoltaic panel, while a battery bank ensures continuous functionality during night-time or low sunlight conditions. By promoting sustainable energy use, this innovative solution enhances vendor productivity, reduces environmental impact, and supports a cleaner, healthier roasting process.

Key words: Induction heating, Parallel resonant inverter, Full-bridge inverter, Voltage Regulator, Internet of Things, Pulse width modulation, Digital Storage Oscilloscope.

Abbreviations: MPPT, Maximum Power Point Tracking; ZVS, Zero Voltage Switching

I. INTRODUCTION

Groundnut roasting is an essential process for enhancing flavor and texture by which the customer be attracted(Yanti et al., 2018). Sale of roasted and salted peanuts is a small business widely opted by street vendors in various Asian and African countries(Variath& Janila, 2017). Traditional roasting methods, such as firewood and gas stoves, present significant challenges, including high operational costs, environmental concerns, health issues and inconsistent roasting quality(Adeyinka Idowu et al., 2020). To address these issues, our project introduces a renewable energy-based induction roasting machine, offering an ecofriendly, and efficient solution. By integrating induction heating with solar energy, this innovation reduces the operational cost and ensures precise temperature control, reduces manual labor, and promotes sustainability. The system is designed to operate off-grid, making it particularly beneficial for vendors in remote areas with limited electricity access.

ISSN: 2582 - 6379
IJISEA Publications
International Journal for Interdisciplinary Sciences and Engineering Applications
IJISEA - An International Peer- Reviewed Journal
2025, Volume 6 Issue 2
www.ijisea.org

1.1 CONVENTIONAL ROASTING METHODS

Roasting is a crucial process in enhancing the flavour, aroma, and texture of beans such as groundnuts and coffee. Various roasting methods have been identified in the literature, each offering unique advantages in terms of efficiency, energy consumption, and roasting quality. The primary methods include:

1.1.1 TRADITIONAL FIREWOOD ROASTING

This method involves roasting beans over an open fire or in a metal pan heated by burning wood. While commonly used by small-scale vendors, firewood roasting has several drawbacks, including inconsistent temperature control, high labour requirements, respiration problems and significant environmental concerns due to deforestation and carbon emissions(Abankwa et al., 2025).

1.1.2 GAS STOVE ROASTING

Gas roasting is a more modern approach that uses liquefied petroleum gas (LPG) or natural gas to heat a roasting chamber or pan. It offers better temperature control than firewood, leading to more uniform roasting. However, gas roasting comes with high operational costs, potential safety risks due to gas leaks, and continued dependence on fossil fuels.

1.1.3 MICROWAVE ROASTING

Microwave groundnut roasting is a method that leverages microwave energy to roast peanuts effectively while minimizing energy consumption compared to conventional roasting methods. The basic technique of microwave roasting entails placing groundnuts within a microwave oven where electromagnetic waves heat the peanuts. This method allows for a rapid increase in temperature, typically within a time frame of 1 to 3 minutes, in contrast to traditional oven roasting, which requires longer durations at higher temperatures (135 to 204 °C) for 5 to 20 minutes(Raigar et al., 2017). Even though it is an energy efficient method of roasting, it may provide uneven roasting and hence less aromatic profile. Microwave roasting requires costly and specialized equipments(Pedron et al., 2025).

1.1.4. INFRARED ROASTING

It is an advanced roasting method suitable for small and large-scale production with improved nutritional value, better quality and reduced roasting time(Golani et al., 2024).Since the implementation of infrared roasting requires special arrangements, many small investors may not be having access to this technology.

During the roasting process, loss of water-soluble vitamins and minerals was observed(Bagheri et al., 2016).

1.2 INDUCTION HEATING (PROPOSED METHOD)

Induction heating is fundamentally based on electromagnetic induction, where a varying magnetic field induces electric currents within a conductive material. According to Faraday's Law, when a conductor is placed in a time-varying magnetic field, an electromotive force (EMF) is generated in the material. This induced EMF drives circulating currents within the body of the conductor, known as eddy currents. These eddy currents encounter the natural electrical resistance of the material, and as a result, heat is produced according to Joule's Law, which states that the power dissipated as heat is proportional to the square of the current multiplied by the resistance ($P = I^2R$)(Acero et al., 2010).

ISSN: 2582 - 6379
IJISEA Publications
International Journal for Interdisciplinary Sciences and Engineering Applications
IJISEA - An International Peer- Reviewed Journal
2025, Volume 6 Issue 2
www.ijisea.org

The effectiveness of induction heating depends on several factors, including the frequency of the alternating current, the electrical and magnetic properties of the material, and the shape and size of the workpiece. Higher frequencies generate more surface-level heating, making them suitable for applications like surface hardening, while lower frequencies can penetrate deeper, suitable for through-heating. In ferromagnetic materials, an additional heating effect arisesfrom magnetic hysteresis, which is the resistance of the material's magnetic domains to realign with the changing magnetic field(Anusree & Sukesh, 2020).

Overall, induction heating offers a fast, efficient, and contactless method of heating metals, with precise control over temperature and heating zones. It is widely used in industrial processes such as brazing, annealing, and metal hardening, as well as in consumer appliances like induction cooktops, where it heats the cookware directly while keeping the cooking surface cool(Sarnago et al., 2024).

1.3 PURPOSE OF SELECTING THIS SYSTEM

Implementing induction heating in the groundnut roasting was motivated by coffee roasting machines(Agustian et al., 2022). This project offers several advantages that align with the goals of efficiency, quality, and safety. Unlike conventional heating methods that rely on external heat transfer, induction heating directly generates heat within the roasting drum, ensuring faster and more uniform roasting. This results in consistent product quality, with groundnuts evenly roasted without surface burning or undercooked centres.

Moreover, induction heating provides precise temperature control, which is essential for achieving optimal roasting conditions and preserving the flavour, texture, and nutritional value of the groundnuts. The system is also energy-efficient, as it minimizes heat losses and converts a higher percentage of input energy into useful heat.

In addition to performance benefits, induction heating improves operational safety and cleanliness. The absence of open flames reduces fire hazards, while the enclosed, contactless heating method lowers the risk of contamination. Its quick response time also allows for better process control and reduced downtime(Mounika & Manohar, 2021).

II. RELATED WORK

ZVS converters play a pivotal role in improving energy efficiency by minimizing switching losses and enabling high-frequency operation, which is essential for precise and rapid induction heating. Solar powered ZVS induction heating systems offer a clean and renewable energy alternative, aligning with global sustainability goals and reducing dependency on fossil fuels for thermal processing applications. The integration of ZVS technology enhances the overall system reliability by allowing soft switching, which reduces stress on power components and extends the lifespan of the converter hardware. Studies show that such systems are highly beneficial for thermal applications like cooking and roasting, where uniform and controlled heat distribution is necessary for quality and consistency(Sarnago et al., 2013). Environmental dependency remains a critical limitation, as the performance of solar-powered systems can fluctuate due to variable sunlight availability. This necessitates the incorporation of battery storage or hybrid energy sources for uninterrupted operation. Micro-controller-based control (e.g., using

ISSN: 2582 - 6379
IJISEA Publications
International Journal for Interdisciplinary Sciences and Engineering Applications
IJISEA - An International Peer- Reviewed Journal
2025, Volume 6 Issue 2
www.ijisea.org

Arduino Uno) allows for intelligent regulation of temperature, timing, and relay-based actuation, making the system suitable for semi-automated or fully automated food processing setups(Morake et al., 2024).In the context of rural applications such as groundnut roasting, ZVS-based systems help reduce labor, increase throughput, and offer better product quality through uniform roasting and thermal control. While ZVS converters provide enhanced efficiency and precise control, their design and implementation demand a higher level of technical understanding related to circuit design, switching behavior, and load matching.

The series resonant inverter shown in figure 1 is one of the simplest and most popular induction heating circuits. It consists of a power supply connected to a resonant circuit formed by a capacitor and an inductor arranged in series. When the circuit operates at its resonant frequency, the voltage and current are in phase, resulting in minimal energy loss and efficient energy transfer to the load. The heating coil, usually made of copper, acts as the inductor, and the material to be heated is placed inside or near this coil.

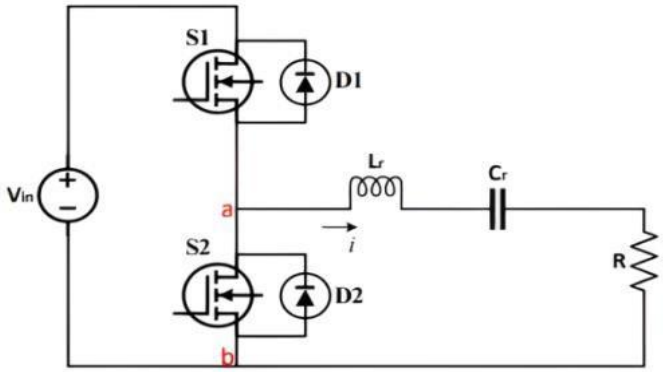

Figure 1: Shows Series Resonant Inverter

This type of inverter is known for its stable operation and reliable performance. It provides a high-frequency AC output that is ideal for heating metal objects uniformly. The simplicity of its design makes it easy to implement, and it is often used in medium-power applications. However, it requires precise tuning to the resonant frequency for optimal performance. This ensures that maximum energy is transferred to the material without causing damage to the circuit components.

The full-bridge inverter is a more powerful version of the half-bridge circuit. It uses four switching devices arranged in a bridge configuration. The full-bridge inverter shown in Figure 2 allows for full control over the direction of current through the induction coil, resulting in better control of the heating process. The fullbridge design is ideal for high-power applications and offers improved efficiency over the half-bridge model.

ISSN: 2582 - 6379
IJISEA Publications
International Journal for Interdisciplinary Sciences and Engineering Applications
IJISEA - An International Peer- Reviewed Journal
2025, Volume 6 Issue 2
www.ijisea.org

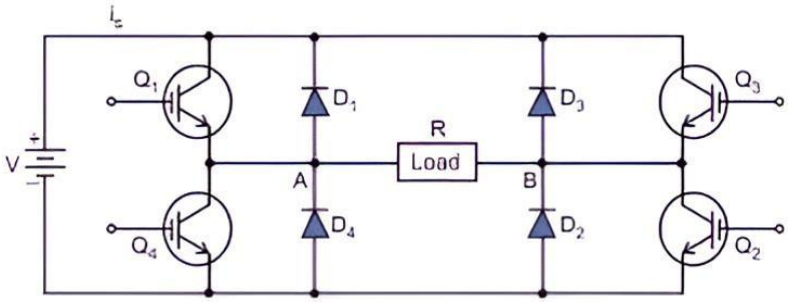

Figure 2:Shows Full-bridge inverter

This type of inverter is commonly used in industrial settings where larger objects or greater quantities of materials need to be heated. In our groundnut roasting machine project, the full-bridge inverter could be beneficial for achieving high heating rates and consistent roasting of large batches. Despite its advantages, the full-bridge circuit is more complex and expensive due to the increased number of components and the need for precise control circuits.

III. METHODOLOGY

The setup was fabricated with two main sections. First one is a mechanical stirrer assembly consists of horizonal blades mounted in a vertically fixed motorized stirrer. The stirrer is driven by a geared DC motor.

The stirrer ensures uniform roasting of nuts. The second section is the induction heating arrangement which uses ZVS converter.

The proposed system introduces a modern and energy-efficient method for roasting groundnuts by using induction heating technology powered entirely by solar energy. Traditional roasting methods, such as using direct flame or resistive heating coils, are usually labour-intensive, consume a lot of electricity or fuel, and provide uneven heating results. These methods can lead to inconsistent roasting and higher operating costs. In order to overcome these issues, our project is designed to offer a clean, automatic, and uniform heating process by using high-frequency induction heating that works with renewable solar power.

The proposed roasting system introduces an innovative approach by integrating renewable energy, intelligent temperature control, and automatic mechanical mixing into a single compact unit. The system is powered entirely by direct current (DC) generated from solar panels, eliminating the need for conventional alternating current (AC) power sources. To ensure stable operation and maximum power utilization, a Maximum Power Point Tracking (MPPT) controller is used to regulate and maintain a constant 48V DC output. This power supply directly feeds a Zero Voltage Switching (ZVS) induction heating circuit, which is known for its high efficiency and low switching losses. The ZVS circuit generates a high-frequency alternating current through a work coil, creating a strong magnetic field that heats a ferromagnetic container placed within it. This contactless heating method ensures fast and uniform heat distribution without energy loss through conduction or convection.

ISSN: 2582 - 6379
IJISEA Publications
International Journal for Interdisciplinary Sciences and Engineering Applications
IJISEA - An International Peer- Reviewed Journal
2025, Volume 6 Issue 2
www.ijisea.org

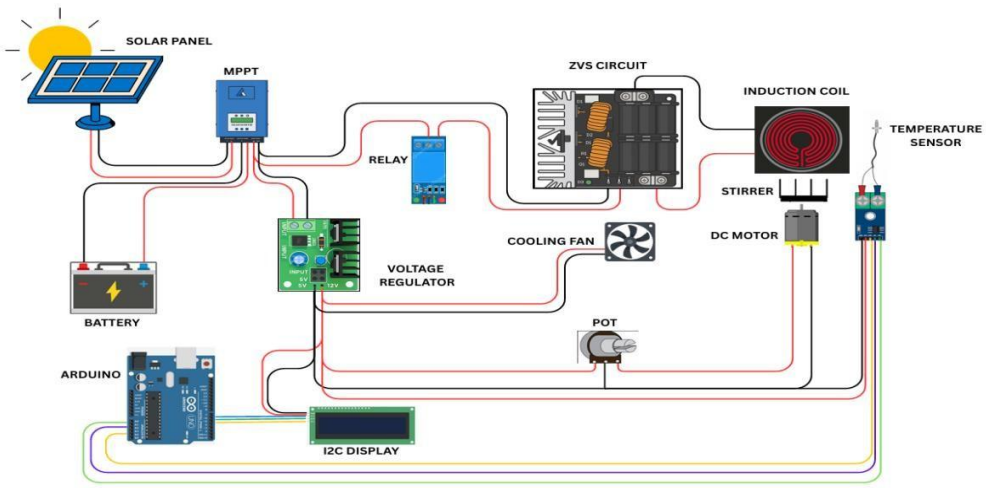

Figure 3:Shows Overall Connection Diagram

The overall connection diagram is shown is the figure 3, as illustrated in the system diagram, integrates multiple modules working in conjunction to perform automated energy conversion, monitoring, and control. The setup is designed to operate efficiently under solar energy input, utilizing appropriate control and regulation units to ensure system stability and responsiveness. Key elements such as sensing, processing, actuation, and power management are organized into a coherent architecture that facilitates real-time operation and adaptability to dynamic conditions. To enhance clarity and facilitate a more in-depth understanding, the entire system is divided into four subsystems—each addressing a specific functional domain.

The system is primarily powered by a solar photovoltaic module designed to deliver a maximum output voltage of 48V and a current of up to 22.9A, based on the overall system power rating of approximately 1100W.The heating system consists of ZVS converter, heating coil and relay set up.

The Zero Voltage Switching (ZVS) circuit forms the core of this induction heating system. It uses a pair of power MOSFETs arranged in a half-bridge configuration, driven passively through cross-coupled gate resistors and diodes. The coil used in this system is made from a 6 mm diameter copper tube shaped into a flat spiral, commonly referred to as a pancake coil. This coil acts as the main heating element. It generates a rapidly alternating magnetic field that induces eddy currents in any conductive object placed inside or near the coil. A relay is used in the circuit to control the ON and OFF switching of the ZVS circuit. When the relay is activated, it connects the DC power supply to the ZVS board, allowing the heating process to begin. This relay can be triggered manually or through a control system such as a microcontroller or timer.

The Arduino Uno serves as the central control unit in this system, orchestrating the communication between the temperature sensor and the I2C display. It reads real-time temperature data, processes it, and makes decisions based on predefined thresholds. The temperature sensor, connected to the Arduino, plays a critical role in real-time environmental monitoring. It continuously measures the ambient temperature and transmits the data to the Arduino. The I2C display module is used to visually present

ISSN: 2582 - 6379
IJISEA Publications
International Journal for Interdisciplinary Sciences and Engineering Applications
IJISEA - An International Peer- Reviewed Journal
2025, Volume 6 Issue 2
www.ijisea.org

the temperature data in real time. It communicates with the Arduino through only two lines – SDA and SCL – which helps conserve I/O pins on the microcontroller. The system incorporates a DC motor mechanically coupled to a stirrer blade, facilitating efficient mixing or agitation as part of the overall process. The speed of the motor is precisely controlled through a potentiometer, which allows manual adjustment based on real-time temperature conditions or experimental requirements.

IV. RESULTS

The prototype has been designed and fabricated to demonstrate the usage of renewable energy source for the social upliftment through small businesses with lowest running cost.The system has been developed to roast a small batch of groundnuts (less than 500 gm) using a 260 W solar PV panel. The converter was designed to operate at a switching frequency of 26 kHz with the circuit inductance of 0.1 mH (heating coil inductance) and the capacitance value of 0.29 uF. The DSO captured waveform at 26 kHz shows smooth, in-phase sinusoidal voltage (yellow) and current (green) across the induction coil. This resonance confirms Zero Voltage Switching, minimizing switching losses and maximizing efficiency.

Real-time DSO verification proves reliable ZVS operation for induction heating.

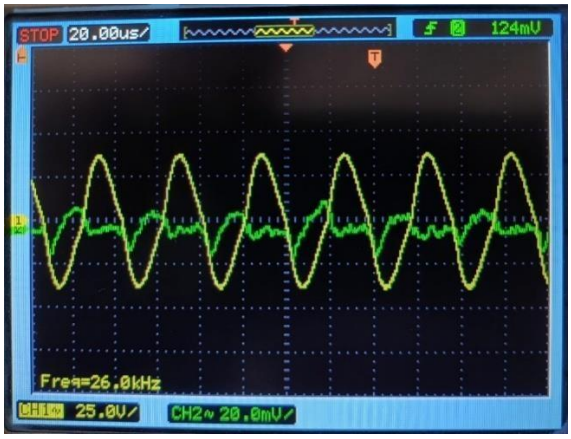

Figure 4 : Shows Output waveform of ZVS

V. CONCLUSIONS

The Solar-Powered Groundnut Roasting Machine with Induction Heating is an energy-efficient and sustainable solution designed to automate the roasting process. By utilizing solar power, the system reduces dependency on conventional electricity, making it ideal for small-scale farmers and industries in remote areas. The use of induction heating ensures precise and uniform roasting, enhancing the flavor and texture of groundnuts. A temperature sensor with an LCD display provides real-time monitoring, ensuring controlled heating to prevent overheating or under-roasting. The system includes a 12V DC motor with a gear mechanism, which stirs the groundnuts at a constant low speed, ensuring even heat distribution and preventing burning. The automated process increases efficiency while reducing labor

costs. Since the system operates on renewable energy, it is environmentally friendly and cost-effective. Future enhancements could include automated temperature control, multiple roasting modes for different seeds, and IoT-based remote monitoring for real-time control. Improving the efficiency of the solar panel and battery system would extend operational hours. Scaling up the system for commercial use would further enhance productivity. With these advancements, the system has the potential to become a fully autonomous, sustainable solution for energy-efficient food processing, benefiting both small and largescale industries.

REFERENCES :

[1] Abankwa, E. O., Boadu, M. K., Amankona, E., &Fatahia, W. Z. (2025). Design and Manufacture of A Manual Vertical Groundnut Roasting Machine. *AFRICAN JOURNAL OF APPLIED RESEARCH*, *11*(1), 18–33. https://doi.org/10.26437/ajar.v11i1.823

[2] Acero, J., Burdio, J. M., Barragan, L. A., Navarro, D., Alonso, R., Ramon, J. R., Monterde, F., Hernandez, P., Llorente, S., & Garde, I. (2010). Domestic induction appliances. *IEEE Industry Applications Magazine*, *16*(2), 39–47. https://doi.org/10.1109/MIAS.2009.935495

[3] Adeyinka Idowu, A., Olamide Abigael, A., Babatunde Kazeem, A., & Modupe Beatrice, O. (2020). Design, Fabrication and Evaluation of Electrically-operated Groundnut Roasting Machine. *American Journal of Engineering and Technology Management*, *5*(3), 48. https://doi.org/10.11648/j.ajetm.20200503.11

[4] Agustian, R., Bintoro, A., Rosdiana, R., Jannah, M., Salahuddin, S., & Al-Ani, W. K. A. (2022). Design of Automatic Coffee Bean Roaster Based on Arduino Uno Microcontroller. *International Journal of Advances in Data and Information Systems*, *3*(2), 49–57. https://doi.org/10.25008/ijadis.v3i2.1238

[5] Anusree, K. V., & Sukesh, A. (2020, November 27). Solar Induction Cooker. *2020 IEEE International Conference on Power Electronics and Renewable Energy Applications, PEREA 2020*. https://doi.org/10.1109/PEREA51218.2020.9339725

[6] Bagheri, H., Kashaninejad, M., Ziaiifar, A. M., &Aalami, M. (2016). Novel hybridized infrared-hot air method for roasting of peanut kernels. *Innovative Food Science & Emerging Technologies*, *37*, 106–114. https://doi.org/10.1016/j.ifset.2016.08.014

[7] Golani, R., Leishangthem, C., Xiao, H., Zhang, Q., & Sutar, P. P. (2024). Effect of high temperature short time infrared roasting of peanuts. *Journal of Future Foods*, *4*(2), 173–178. https://doi.org/10.1016/j.jfutfo.2023.06.009

[8] Morake, A., Samikannu, R., Akila, L., Karpagam, R., Rohini, R., & Yahya, A. (2024). Design and Development of a Microcontroller Based Solar PV Cooker. *2024 4th International Conference on Ubiquitous Computing and Intelligent Information Systems (ICUIS)*, 1882–1887. https://doi.org/10.1109/ICUIS64676.2024.10866514

[9] Mounika, A., & Manohar, G. (2021). Design and Simulation of Solar-based Induction Heating System. *CVR Journal of Science and Technology*, *20*. https://doi.org/10.32377/cvrjst

[10] Pedron, G., Jaouhari, Y., &Bordiga, M. (2025). Conventional and Innovative Drying/Roasting Technologies: Effect on Bioactive and Sensorial Profiles in Nuts and Nut-Based Products. *Applied Sciences*, *15*(3), 1258. https://doi.org/10.3390/app15031258

[11] Raigar, R. K., Upadhyay, R., & Mishra, H. N. (2017). Optimization of microwave roasting of peanuts and evaluation of its physicochemical and sensory attributes. *Journal of Food Science and Technology*, *54*(7), 2145–2155. https://doi.org/10.1007/s13197-017-2654-0

[12] Sarnago, H., Guillen, P., Burdío, J. M., & Lucía, Ó. (2024). Buck-Boost Inverter for Improved Power Conversion in Induction Heating Applications. *IECON 2024 - 50th Annual Conference of the IEEE Industrial Electronics Society*, 1–4. https://doi.org/10.1109/IECON55916.2024.10905552

[13] Sarnago, H., Lucia, O., Mediano, A., &Burdio, J. M. (2013). Modulation scheme for improved operation of an RB-IGBT-based resonant inverter applied to domestic induction heating. *IEEE Transactions on Industrial Electronics*, *60*(5), 2066–2073. https://doi.org/10.1109/TIE.2012.2207652

[14] Variath, M. T., & Janila, P. (2017). Economic and Academic Importance of Peanut. In Manish K.Pandey, Naveen Puppala, & Rajeev K. Varshney (Eds.), *The Peanut Genome* (pp. 7–26). Springer International Publishing. https://doi.org/10.1007/978-3-319-63935-2_2

[15] Yanti, S. A., Soekardi, C., & Lubis, M. S. Y. (2018). Analysis of Parameter Roasting on Color and Peanuts Roasted Taste. *Aceh International Journal of Science and Technology*, *7*(2), 138–143. https://doi.org/10.13170/aijst.7.2.8964